Ceramic SMD Automotive Grade Crystal

Model: FXA2520B Series **RoHS Compliant** **Rev. 6/2/2009**

http://www.foxonline.com/need_a_sample.htm

Need a Sample®

FEATURES

- Meets AEC-Q200 Requirements
- Fundamental to 50 MHz
- Temperatures to -40ºC ~ +125ºC
- Seam Seal
- Tape and Reel (3,000 pcs. STD)

• PART NUMBER Learn More - Internet Required

Part Number	Model Number	Frequency Range (MHz)
827B-Frequency-xxxxx	**FXA2520B**	16.000 ~ 50.000

• STANDARD SPECIFICATIONS

PARAMETERS	MAX (unless otherwise noted)
Frequency	16.000 ~ 50.000 MHz
Frequency Tolerance @ 25ºC	±50 PPM[1]
Frequency Stability, ref @ 25ºC -40 ~ +125ºC -40 ~ +85ºC	 ±100 PPM ±50 PPM[1] (Customer Specified)
Temperature Range Operating (TOPR) Storage (TSTG)	 -40ºC ~ +125ºC -55ºC ~ +150ºC
Shunt Capacitance (Co)	5pF
Load Capacitance (CL)	7pF~Series (Customer Specified)
Drive Level	100µW
Aging per year	±5 PPM
Maximum Soldering Temp / Time	260ºC / 10 Seconds
Moisture Sensitivity Level (MSL)	1
Termination Finish	Au
Seal Method	Seam Seal

[1] Other tolerances and stabilities available. Contact Fox Technical Support for specific requirements.

Frequency Range (MHz)	Operating Mode	Max ESR Ω
16.000 ~ 29.999999	Fundamental	100
30.000 ~ 50.000000	Fundamental	70

Note: Dimensional drawing is for reference to critical specifications defined by size measurements. Certain non-critical visual attributes, such as side castellations, etc. may vary.

The above specifications, having been carefully prepared and checked, are believed to be accurate at the time of publication; however, no responsibility is assumed by Fox Electronics for inaccuracies.

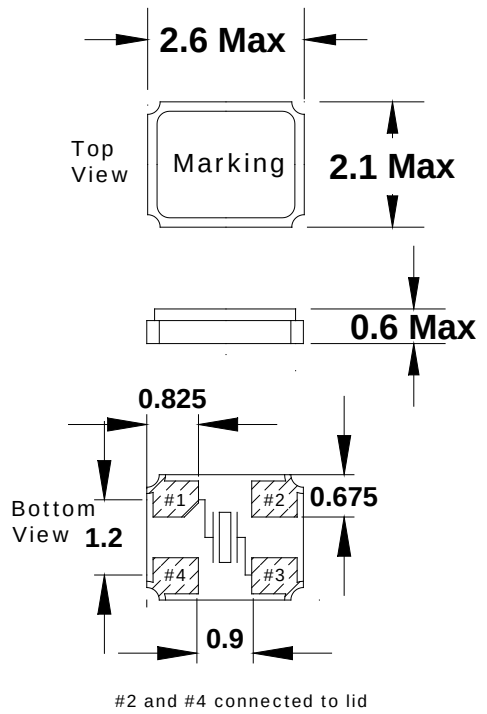

#2 and #4 connected to lid

Recommended Solder Pad Layout

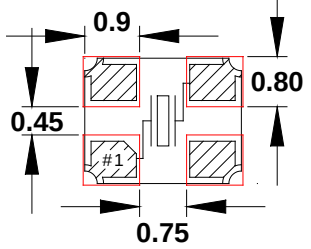

All dimensions are in millimeters.

FOXElectronics 5570 Enterprise Parkway Fort Myers, Florida 33905 USA +1.239.693.0099 FAX +1.239.693.1554 http://www.foxonline.com
EMEA Tel/Fax: +44 .1767.312632 | **Asia** Hong Kong Tel: +852.2854.4285 Fax +852.2854.4282 | **Japan** Tel: +81.3.3374.2079 Fax: +81.3.3374.5221

© 2009 FOX ELECTRONICS | ISO9001:2000 Certified

• TAPE SPECIFICATIONS (millimeters)

MODEL	A	B	C	D	E	F	STD Reel QTY
FXA2520B	∅1.0	4.0	4.0	3.5	8.0	0.8	3,000

• REEL SPECIFICATIONS (millimeters)

MODEL	G	H	I	J	K	L	M
FXA2520B	2.5	∅13	∅21	∅60.2	∅178	8.1	1.6

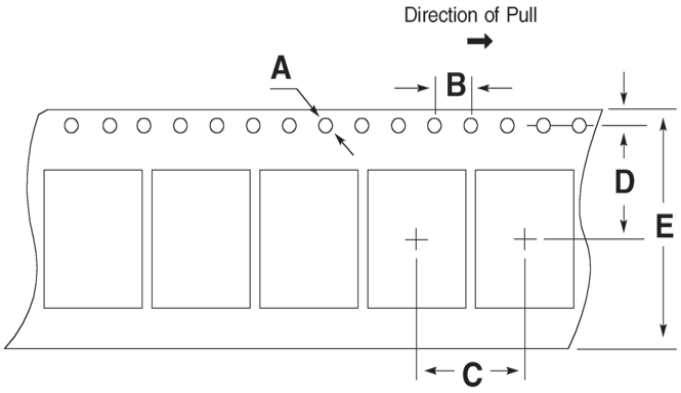

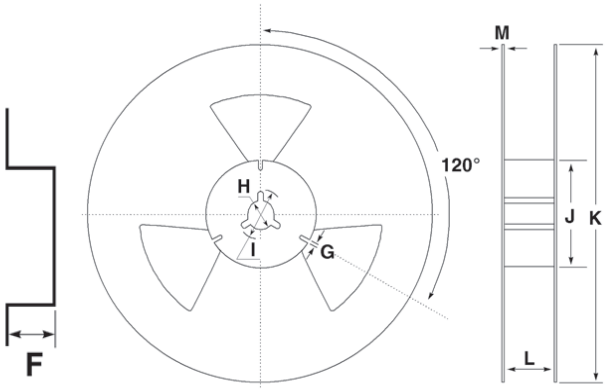

© 2009 FOX ELECTRONICS | ISO9001:2000 Certified